PROJECT OVERVIEW

SSE "EcoCenter" joined Exlterra's NSPS initiative to address the contaminiation around Chernobyl

Above | *Project Hemera Proximity Map*

Above | *Project Hemera Installation Overview.*

DESCRIPTION

Exlterra has developed a breakthrough environmental technology called **Nucleus Separation Passive System (NSPS)** that allows a true and final deconstruction of polluted/contaminated sites for a various kind of pollutions without moving earth and without any chemicals.

Chernobyl is a worldwide known contaminated site since the nuclear accident in April 1986. So far, no known technique or technology has been able to address the contamination that followed the accident and since then a large area around the Chernobyl power plant has become an exclusion zone.

Chernobyl has been selected for the NSPS demonstration for the following reasons:

- ✔ Ability to collect high quality and undisputable data due to a clear baseline and certified data testing and lab personnel on-site.
- ✔ Radioactive contamination is considered as *impossible* to solve.

OBJECTIVE

The objective is to have a significant reduction of radioactivity 6 months after completion of the installation, on the 1Ha installation zone.

Five years after completon of the installation, radioactivity on the installed zone will be returned to original/natural levels.

LOCATION

The NSPS installation will happen on a 1Ha surface within the 10km exclusion zone of Chernobyl.

TIME FRAME

AUGUST 2019	Signature of the agreement for the scope of work and for research and data collection with state agency SSE "Ecocenter."
OCTOBER 2019	Carried out data collection prior to NSPS installation.
OCTOBER 2019	Installation site has been cleared of obstacles for drilling.
NOVEMBER 14, 2019	Installation of the first NSPS unit.
SEPTEMBER 3, 2020	Completion of NSPS installation

NSPS
OVERVIEW

The Nucleus Separation Passive System (NSPS)
is a breakthrough environmental technology

NSPS DESCRIPTION

Contamination is a severe problem due to the very long time required for radioisotopes to naturally decay to safe levels, typically taking many decades or even centuries to occur.

Radioactive contamination levels decline naturally due to a tendency for the nucleus of atoms and for large molecules to very gradually disassociate. This reduces the concentrations of radioisotopes in the soil, which lowers the radioactivity of the soil overall as the isotopes decay by a very slow natural disperal of the radioactive isotopes in the contaminated soil.

The working hypothesis indicates that very small particles dispersed in the soil are continuously caused to be accelerated to very high velocities.

These particles moving at high velocities could potentially be used to reduce contamination of a region of the soil by directing a great number of such particles into a layer of the soil within a contamination region. This would result in a breaking down of the nucleus of radioisotope atoms or of atoms in molecules to thereby reduce the levels of contamination by reducing concentrations of radiation causing atoms and molecules.

The NSPS will substaintially accelerate the rate of decay of contaminants in a layer of soil extending a short distance below the ground surface and also in low growing vegetation above the ground surface utilizing the high velocity particles described above.

PRODUCT CHARACTERISTICS

A NSPS unit is a polyethylene extrusion that has 5 chambers around a central core and is capped at its top. NSPS comes in various length. NSPS becomes a system when it is installed into the ground according to a specific pattern and in various depth.

NSPS units are inserted vertically into the ground and below grade after a hole is bored using a drill rig. After installation, the whole is backfilled with the excess soil.

PHYSICAL

Base Lengths:

2.8m, 5.6m, 8.4m, 11.2m, 14m, 16.5m

Diameter:

30mm

Material:

Polyethylene

Material Characteristics:

- Environmentally Safe
- Excellent corrosion and abrasion resistance
- Working temperature -29°C to 82°C

Patent pending as of April 2021

HOW IT WORKS

NSPS, is a passive system developed by Exlterra to accelerate radioactive decay by harnessing existing energy within the ground. This invention, in short, uses science and physics and nuclear energy concepts to solve a problem of severe radiation contamination. The invention, NSPS, which appears to be a simple and geometrically shaped plastic tube, is intentionally shaped to capture this energy and direct this energy towards the destruction of radioactive material.

Although complex in concept and understanding, this invention is based on the understanding of "high velocity particles" that are naturally emitted from decaying radioactive isotopes.

The "high velocity particles" also known as positrons have been theorized by Paul Dirac as early as 1928 and discovered by Carl D. Anderson in 1932. Carl D. Anderson went on to win the Nobel Prize for Physics in 1936 for this discovery. As stated in Wikipedia, "positrons are produced naturally in Beta+ decays of naturally occurring radioisotopes and in interactions of gamma quanta (emitted by radioactive nuclei) with matter."

A.P. Mills Jr. published in Science Direct, in Methods in Experimental Physics in 1995 the existence of said particle "positrons are the antimatter partners of the electrons which are constituents of all matter", and this particle has continued to be studied extensively and are even used in medical diagnosis in the technique known as positron emission tomography (PET). In a publication as recent as 2015 explaining positrons role in radioactivity: Syed Naeem Ahmed in Physics and Engineering of Radiation Detection,

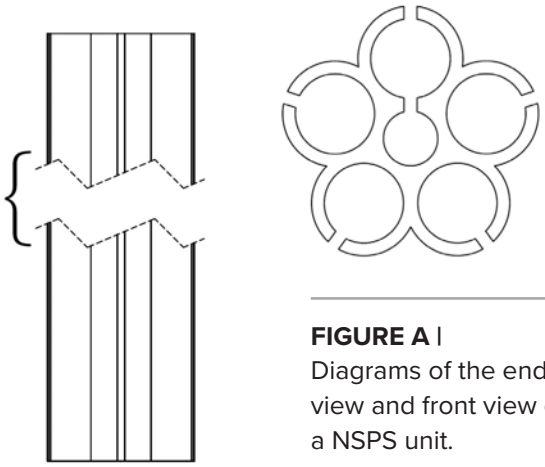

FIGURE A |
Diagrams of the end view and front view of a NSPS unit.

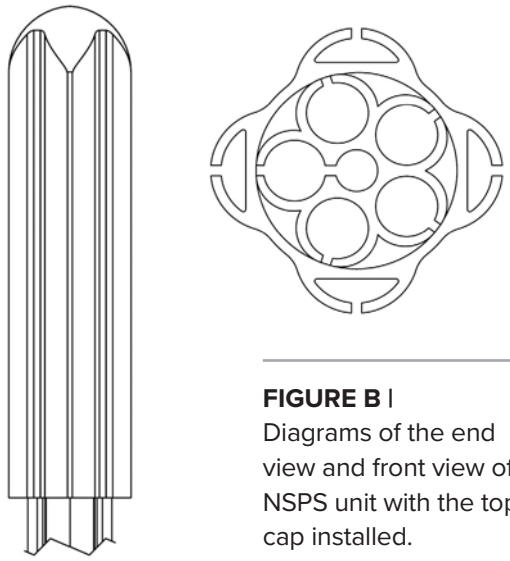

FIGURE B |
Diagrams of the end view and front view of a NSPS unit with the top cap installed.

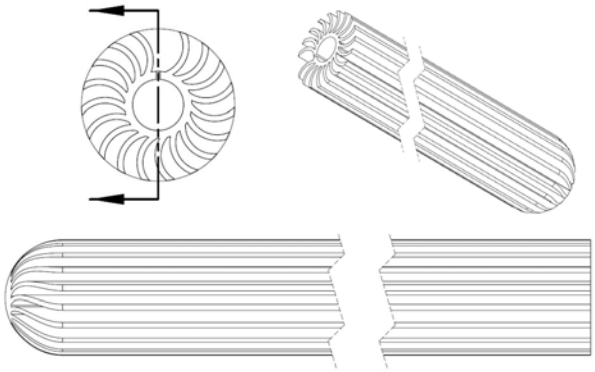

FIGURE C |
Diagrams of the end view, side view and cross section view of the BSTR unit. The BSTR is combined with the NSPS units to to help loosen the soil.

"Properties and sources of radiation" explains their origin, and existence. In "Fundamentals of Radioactivity" by Malcolm Joyce in Nuclear Engineering, (2018), it is stated that "various terminologies are used to describe these types of radioactive decay including negative beta decay and positive beta decay, respectively. The latter is also sometimes referred to as positron decay." The article goes on to state further that, "positrons are positively charged but have the same mass and magnitude of charge as their electron counterparts. After any residual kinetic energy has been lost via interactions with the electrons in matter, the positron and electron annihilate with each other, ceasing to exist and leaving behind a quantity of energy equivalent to their rest energy masses." Positrons come from the decay of nuclides that have an excess of protons in their nucleus, such as radioactive nuclei, and are formed in pair production in which energy of a gamma ray in the field of a nucleus is converted into an electron-positron pair.

As can be inferred, the positron is a well-known and studied particle. This invention, however, is the first of its kind to demonstrate how to use this natural and unstable high velocity particle to achieve a positive phenomenon. A patent has been filed to introduce the novel technique of the NSPS and how it is adept at capturing and directing the positrons existing force in nature to break down the radioactive isotopes in the soil.

The NSPS acts as a natural "particle accelerator" for lack of better words, creating space in the soil and collecting the positrons within the soil to circumvent this field into a narrow energy tube in the core of the NSPS. This accumulation of energy is then accelerated and funneled towards the cap of the NSPS (similar to an upside-down tornado) and released through the sides of the cap. Once released, the positrons accumulated energy is now located closer to the location of the boosters, a critical part of the passive system.

The boosters, for which there are 3 that are 90 cm apart, with two of them facing 120 degrees away in a northerly direction and one in a southern facing direction create a 360-degree radius around the NSPS. These boosters help loosen the soil, but more importantly act as a network to collect and redirect that positrons energy towards the surface of the soil. The southernmost booster is simply redirecting the positron energy towards the two northern directed boosters. The reason the northern boosters are the most important has to do with Chernobyl's location north of the equator and the gravitational pull occurring from the north pole.

Once all of this energy is harnessed and redirected, the "energy beam of positrons" collides with the nuclei of the radioactive isotope breaking it down into its original forms of uranium and plutonium and the resulting energy is released to rebind with its original form. The boosters also decrease the velocity of the accelerated positron to allow for successful decay of the surface radioactive isotope. At the conclusion of this process, the magnetic field naturally reabsorbs, binds, and directs this energy as has always been done.

With the intentionally calculated space that is created around the NSPS, a space naturally where energy collects, the positrons detect this “space” and funnel their energy towards the openings in the side of the NSPS, where it is then accelerated towards the cap. As used in PET scans in hospitals, positrons look for irregularities or atom sized spaces to pass into. Once the positron is in one of the chambers of the NSPS, it looks for the path of least resistance, funneling its energy up and out and not through the plastic. This invention is unique because it is the first of its kind to provide a pathway for positrons to naturally accelerate in a passive system to remove contaminated areas.

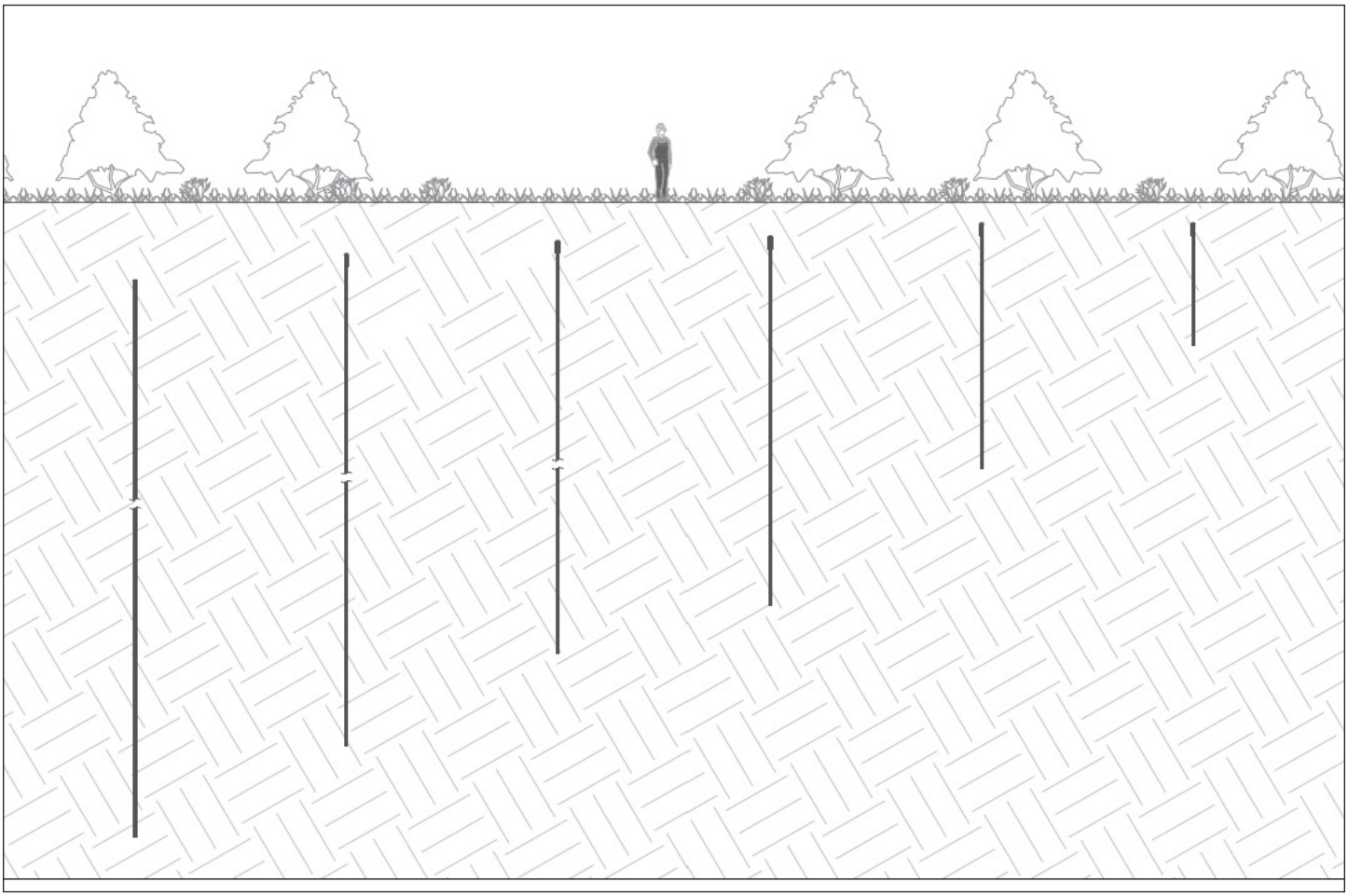

FIGURE D |
This diagram represents each of the six different NSPS units with their relative depths as well as their distance below the ground surface.

NSPS INSTALLATION

The Nucleaus Separation Passive System (NSPS) installation pattern, process and procedures

INSTALLATION OVERVIEW

LOCATION

The NSPS system has been installed on a 100m x 100x (1 hectare) area, centered on a point located at Latitude 51.288410°, Longitude 30.190700°. All trees and bushes within the install have been removed to enable the installation.

[See below, *Project Hemera Installation Overview*].

LAYOUT

For the NSPS system to be successful, the installation of the individual units have been done according to the layout provided by Exlterra. This layout enables the NSPS units to operate as a system and start deploying their benefits. For this test site 19,127.1m of NSPS will be installed.

[See below *Installation Pattern*].

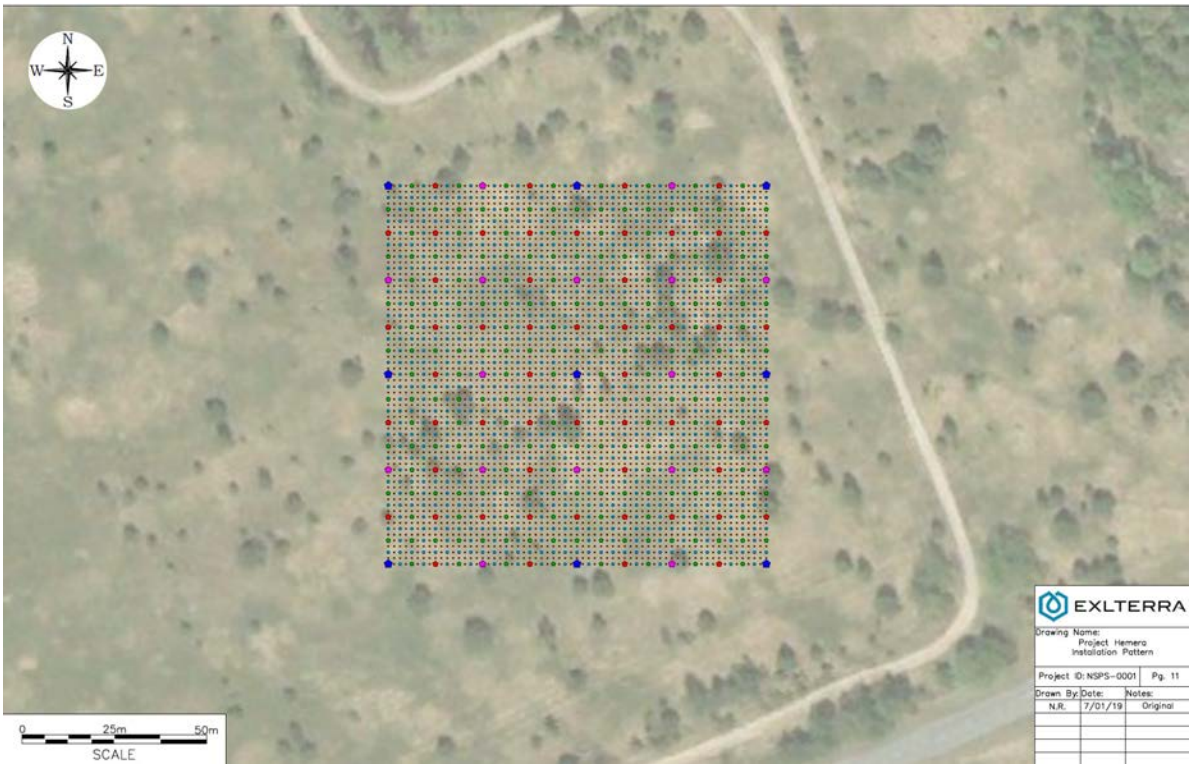

| **Pictured** | *Project Hemera Installation team using auger drilling to reach a maximum depth of 18m.*

DRILLING

The installation took place using auger drilling down to a maximum depth of 18m. The initial 90cm of drilled soil has been handled and disposed of in accordance with Exclusion Zone regulation. The remaining drilled soil has been maintained separate from the initial 90cm soil and used for backfilling the bore hole.

Once the drilling was completed and no water table/ aquifer penetration occurred, the NSPS unit was placed in the hole, which was then backfilled with the soil designated for backfill.

After completion of the installation, a visual inspection of the install area was conducted to identify potentially reopened holes. Any open holes was then closed using surrounding soil.

2. BOREHOLE DRILLING AND INSTALLATION OF PAWN AND ROOK ELEMENTS

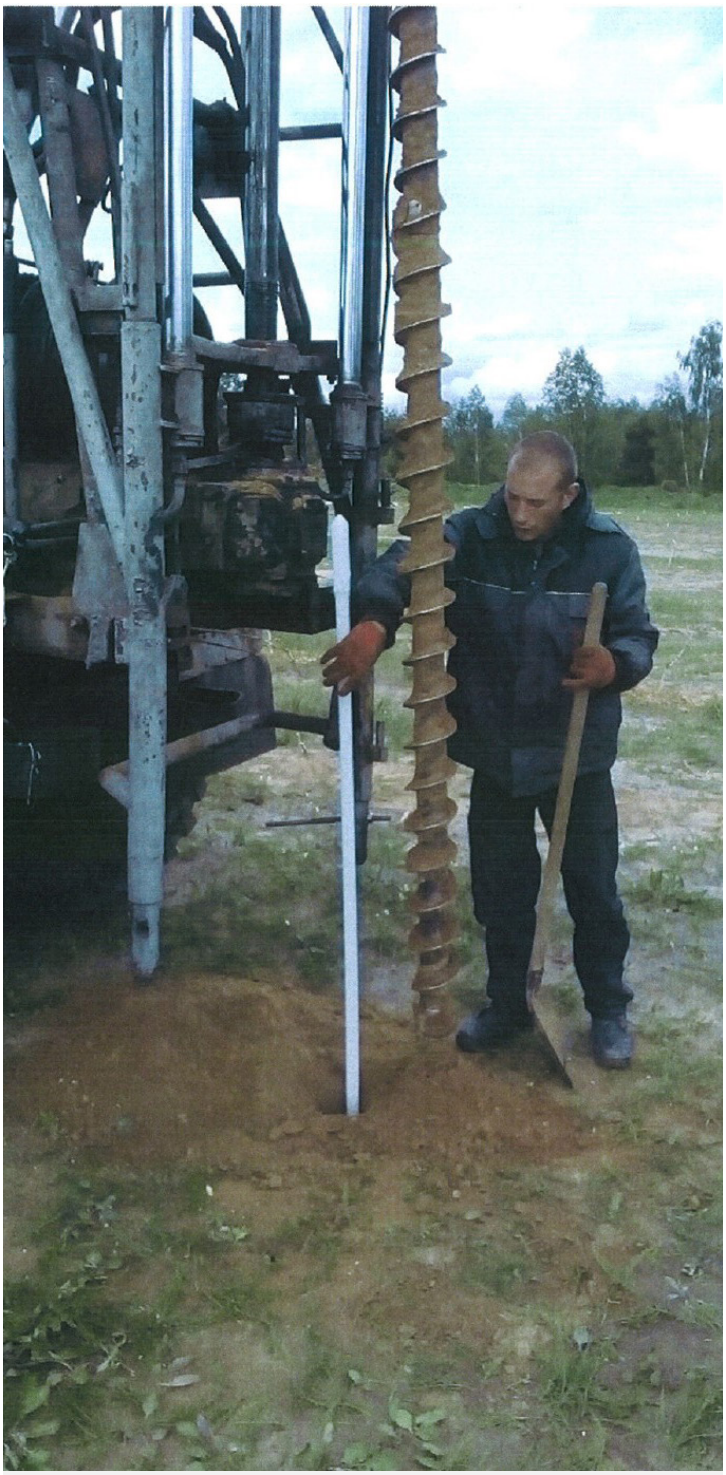

2.4 After completion of drilling, the ele ment is being installed in accordance with the design.

2.5 After installation of the element, the borehole is being backfilled with the soil extracted in the process of drilling.

2. BOREHOLE DRILLING AND INSTALLATION OF PAWN AND ROOK ELEMENTS

2.6 Installation of Pawn elements